SINOLTECH ENERGY LIMITED

SHANDONG SINOLTECH INTERNATIONAL CO., LTD

SINOLTECH

INTEGRITY . HIGH BRIGHTNESS . EASY-INSTALL

ANGLE EYE SERIES ALL-IN-ONE SOLAR LIGHT

3 - Years Product Warranty

MODEL SELECTION:

- AE-12
- AE-15
- AE-20
- AE-30
- AE-40
- AE-50
- AE-60
- AE-80

SINOLTECH SERVICE:

- OEM and ODM service
- Dialux report
- Instruction(or video) if you don't know how to install
- If not work, exchange spare part or new product, free of charge under warranty 3 years
- Microwave Sensor, with Remote Control Unit

A: A1-3-712, EAST 8 ENTERPRISE MANSION, DESIGN & CREATIVE INDUSTRIAL AREA, JINAN, CHINA
P: +86 153 1880 7707 | E: susan@sinoltech.com | W: www.sinoltech.com Skype: SINOLTECH |
WhatsApp: +86 153 1880 7707

REMOTE CONTROL ALL IN ONE

ANGLE EYE SERIES MODEL: 12W, 15W, 20W

12W,15W,20W WITH REMOTE CONTROL

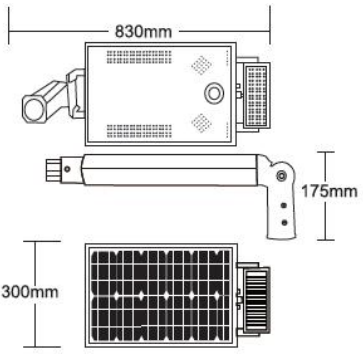

AE-12

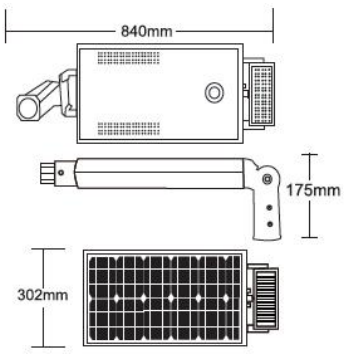

AE-15

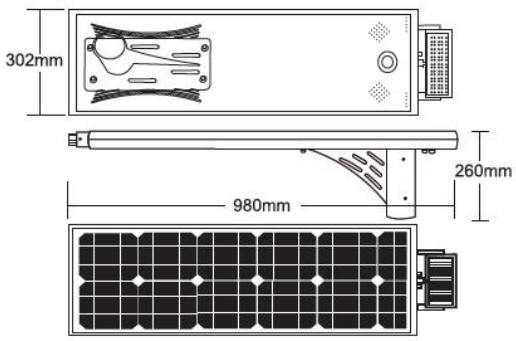

AE-20

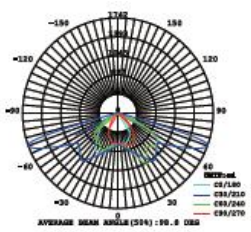

SOLAR LIGHT TECHNICAL DATA			
Model No.	AE-12	AE-15	AE-20
LED Rated Power(W)	12W	15W	20W
Solar Panel PV Power	25W	32W	40W
Batteries(Ah)	12AH / 12.8V	18AH / 12.8V	21AH / 12.8V
LED Brand	Bridgelux	Bridgelux	Bridgelux
Luminous Flux(lm)	1380-1500 LM	1725-1875LM	2300-2500LM
System Voltage	DC 12V	DC 12V	DC 12V
Lighting Effect	100-110 LM/W	100-110 LM/W	100-110 LM/W
Working Humidity	>95%		
Waterproof Degree	IP65		
Colour rendering index	70Ra		
Light pole top diameter	50 - 60 mm		
Install Height	3-4 M	4-5M	5-6M
Install Space	10-12 M	12-14M	14-16M
CCT	6000~6500K		
LED life time	50000 hrs		
Working Temp.	-20℃~+50℃		
Working Mode	Light sensor, Timer, Microwave, Timer+Microwave Control		

PACKING DETAIL			
Product Dimension(mm)	L510*W302*H55	L770*W302*H45	L880*W302*H45
Packing Dimension(mm)	570*350*160	815*350*200	970*350*200
N.W./G.W.(KG)	5.70 / 6.80	7.50 / 7.90	9.75 / 10.50

TECHNICAL DATA SHEET

A: A1-3-712, EAST 8 ENTERPRISE MANSION, DESIGN & CREATIVE INDUSTRIAL AREA, JINAN, CHINA
P: +86 153 1880 7707 | E: susan@sinoltech.com | W: www.sinoltech.com Skype: SINOLTECH

REMOTE CONTROL ALL IN ONE

ANGLE EYE SERIES MODEL: 30W, 40W, 50W

30W,40W,50W WITH REMOTE CONTROL

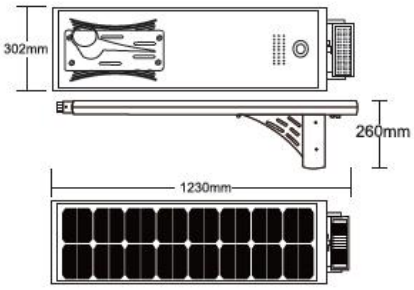

AE-30

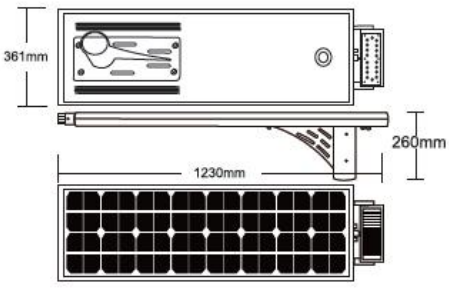

AE-40

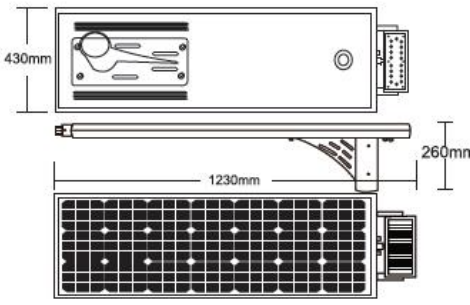

AE-50

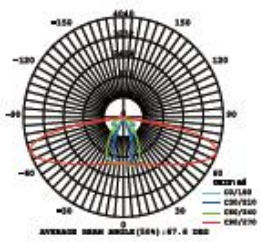

SOLAR LIGHT TECHNICAL DATA			
Model No.	SNFL-30	SNFL-40	SNFL-50
LED Rated Power(W)	30W	40W	50W
Solar Panel PV Power	50W	70W	90W
Batteries(Ah)	27 AH	33 AH	37AH
LED Brand	Bridgelux	Bridgelux	Bridgelux
Luminous Flux(lm)	3450-3750 LM	4800-5200 LM	6000-6500LM
System Voltage	DC 12V	DC 12V	DC 12V
Lighting Effect	100-110 LM/W	100-110 LM/W	100-110 LM/W
Working Humidity	>95%		
Waterproof Degree	IP65		
Colour rendering index	70Ra		
Light pole top diameter	50-60 mm		
Install Height	5-6M	6-7M	7-8M
Install Space	16-19M	19-23M	23-27M
CCT	6000~6500		
LED life time	50000 hrs		
Working Temp.	-20°C~+50°C		
Working Mode	Light sensor, Timer, Microwave, Timer+Microwave Control		

PACKING DETAIL			
Product Dimension(mm)	L1160*W302*H45	L1160*W361*H45	L1380*W430*H45
Packing Dimension(mm)	1215*350*200	1215*405*200	1440*475*200
N.W./G.W.(KG)	13.50 / 15.00	16.00 / 16.50	18.65 / 20.00

TECHNICAL DATA SHEET

A: A1-3-712, EAST 8 ENTERPRISE MANSION, DESIGN & CREATIVE INDUSTRIAL AREA, JINAN, CHINA
P: +86 153 1880 7707 | E: susan@sinoltech.com | W: www.sinoltech.com Skype: SINOLTECH

REMOTE CONTROL ALL IN ONE

ANGLE EYE SERIES MODEL: 60W

60W WITH REMOTE CONTROL

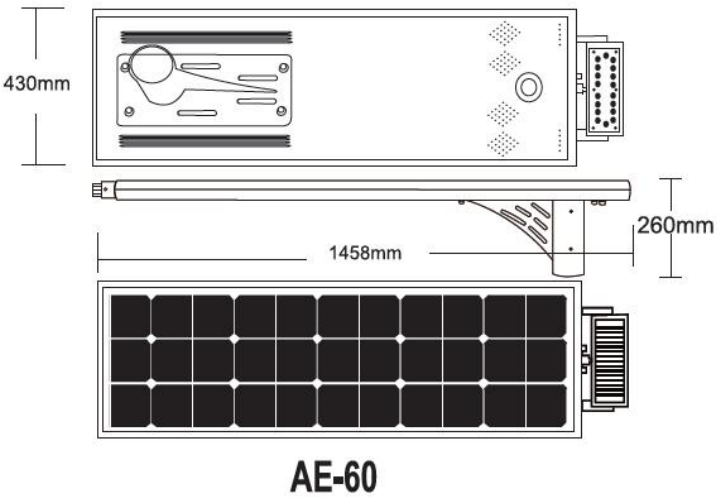

AE-60

Spectrum Chart

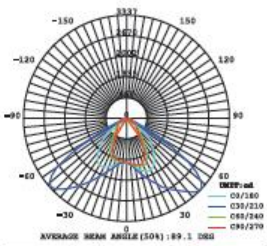

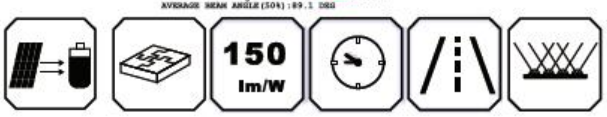

SOLAR LIGHT TECHNICAL DATA	
Model No.	SNFL-60
LED Rated Power(W)	60W
Solar Panel PV Power	110W
Batteries(Ah)	43 AH
LED Brand	Bridgelux
Luminous Flux(lm)	7200-7800 LM
System Voltage	DC 12V
Lighting Effect	100-110 LM/W
Working Humidity	>95%
Waterproof Degree	IP65
Colour rendering index	70Ra
Light pole top diameter	50-60 mm
Install Height	7-8M
Install Space	27-30M
CCT	6000~6500
LED life time	50000 hrs
Working Temp.	-20℃~+50℃
Working Mode	Light sensor, Timer, Microwave, Timer+Microwave Control
PACKING DETAIL	
Product Dimension(mm)	L1380*W430*H45
Packing Dimension	1440*475*200
N.W./G.W.(KG)	20.00 / 22.60

TECHNICAL DATA SHEET